? ?: 1/50

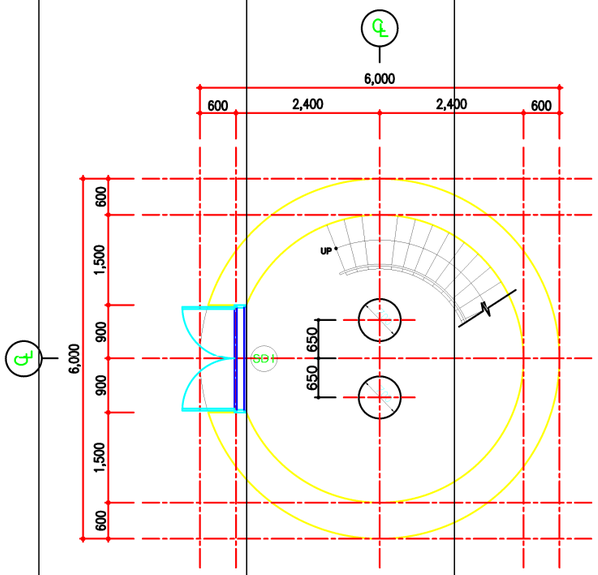

1 FL. ±0 ???
S = 1/50

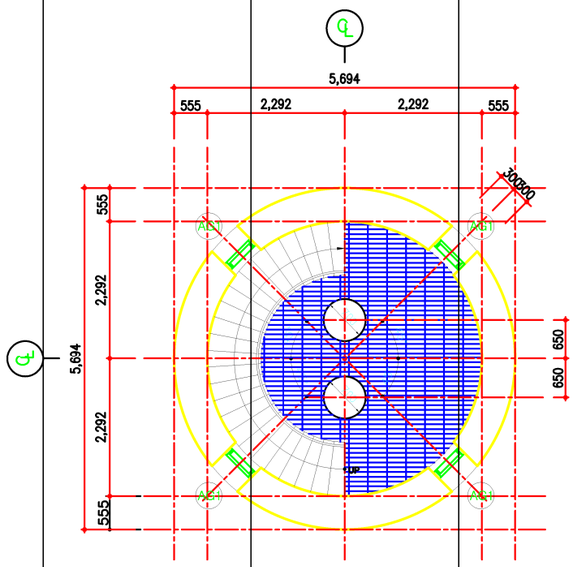

2 FL. +10,000 ???
S = 1/50

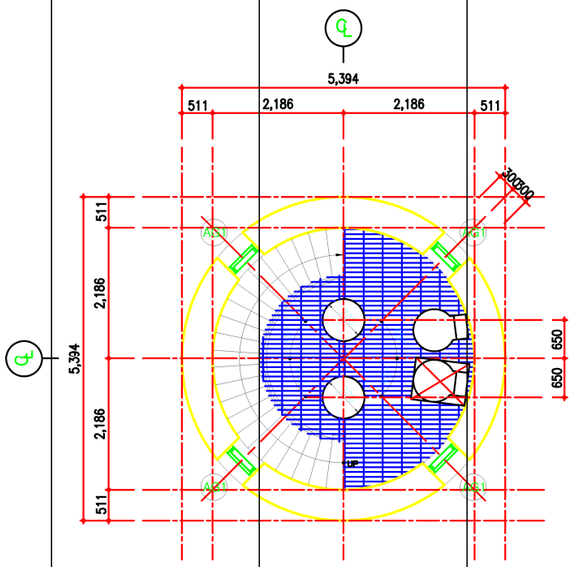

3 FL. +20,000 ???
S = 1/50

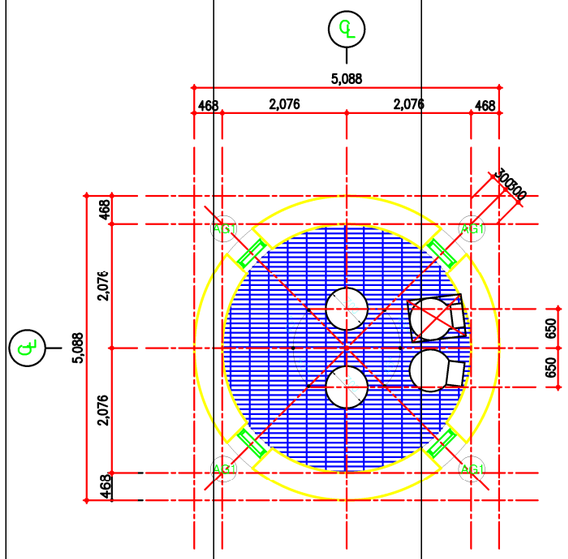

4 FL. +30,000 ???
S = 1/50

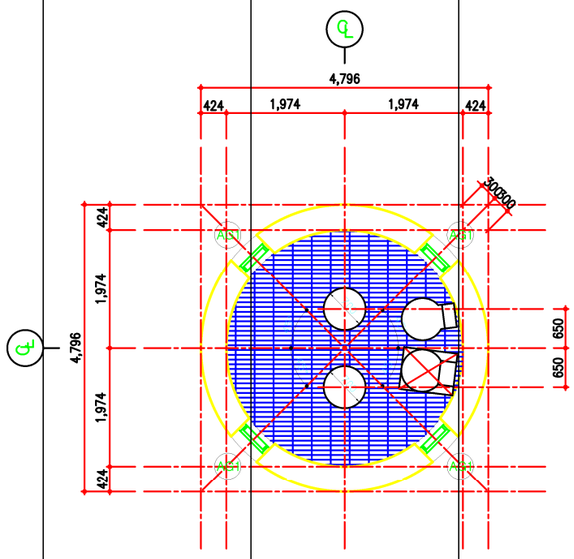

5 FL. +40,000 ???
S = 1/50

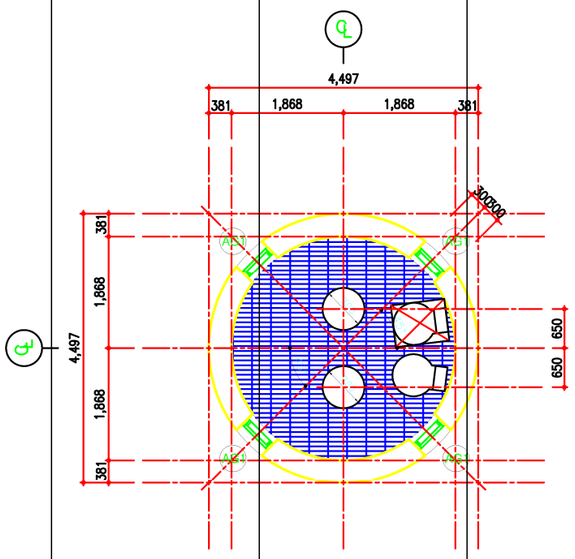

6 FL. +50,000 ???
S = 1/50

*NOTE

1.????

– ?????? : ACI 307-98

??? ???? ? ??(2000, ??????)

– ???? : ????? ??, ??????? ???? ??.

– ??? : ????(Vo)=30m/s (???).

– ???? : A=0.11, I=1.5, S=1.0, Cx=S/(1.2 T)=0.67

– ???? : ?????(?)=1.17 X 10-5/?(=6.5 X 10-6/?)

2.????? ??

????	?? Shell	fck = 24MPA
? ?	KS D 3504(SD30A) : D16??	fy = 300MPA
	KS D 3504(SD40) : D19??	fy = 400MPA

0	2012.04.23 AS-BUILT	L.W.J	
? ?	? ? ? ?	?? ?? ?? ??	
? ? ? ?	GP-A5-101	? ? 1/50	

LH

휴다임

SAMSUNG

?? ???